Catalog No.CN-0011

G+® 吉嘉

# PRODUCT CATALOGUE

# XXY Alignment Stage

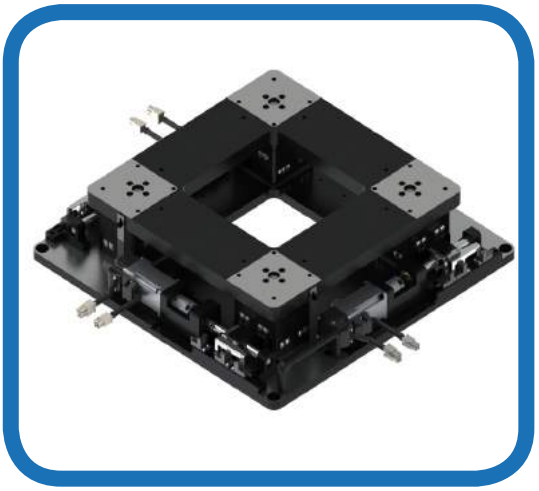

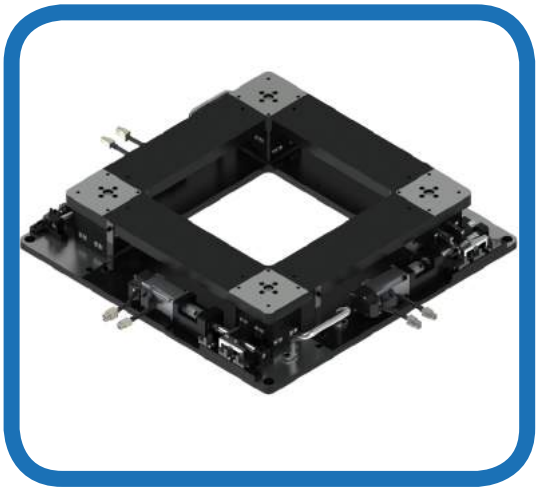

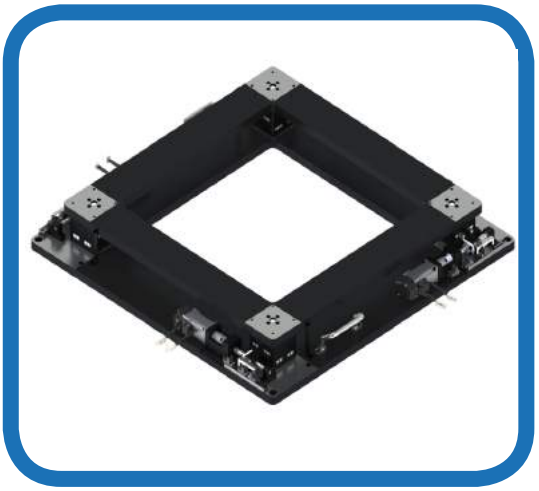

# G+® XXY PRECISION ALIGNMENT STAGE

**Thinner! More Stable! High Rigidity! High Precision! Multiple Options!**

## ■ Structure of Precision Alignment Platform

### ● Diversified Size & Structure

GIGAGER XXY alignment stage is available in both hollow and solid designs to meet different design needs of users;

### ● Compact Design Saves Space

The tri-axial plane design greatly reduces the overall height, and the overall platform is lighter and thinner, saving space;

### ● High Precision, High Rigidity, Stable Guaranteed

The XXY alignment platform performs strict quality control on incoming materials, assembly and testing to ensure the accuracy, stability and service life of the stage.。

## ■ XXY Motion Mode

*A、B、C is Rotary axis，D is Slave axis

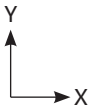


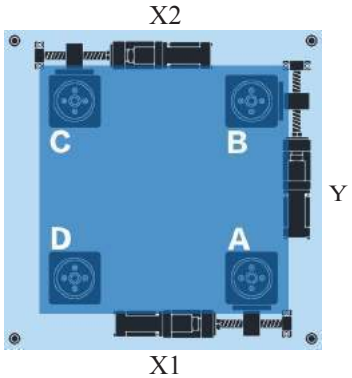


**01 Initial Position**

X1、X2、Y stay in origin

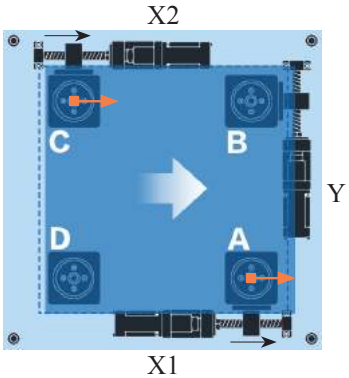


**02 X direction movement**

X1、X2 working，Y not working

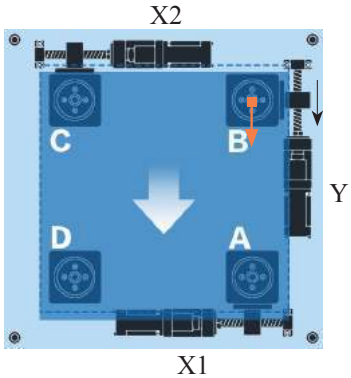


**03 Y direction movement**

X1、X2 not working，Y working

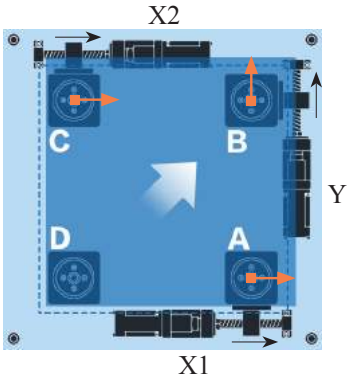


**04 Any oblique movement**

X1、X2、Y Work according to the program algorithm

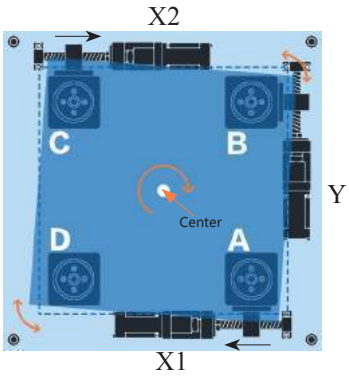


**05 Rotate with the center of the platform**

X1、X2、Y Work according to the program algorithm

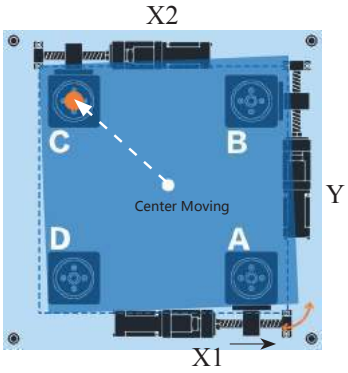


**06 Rotate with any point as center**

X1、X2、Y Work according to the program algorithm

# Ordering Code of XXY Alignment Stage

| Series | Dimension (mm) | | | Precision Level(Options) |
|---|---|---|---|---|
| XXY | 160 | 50 | 170 | G<br>B<br>P |
| | 160 | 55 | 220 | |
| | 160 | 65 | 180 | |
| | 250 | 62 | 310 | |
| | 250 | 75 | 350 | |
| | 350 | 105 | 450 | |
| | 450 | 105 | 550 | |
| | 550 | 105 | 650 | |
| | 650 | 105 | 750 | |

Precision Alignment Stage | Working Platform Size - Total Height - Base Frame Size - G：High Precision / B：Standard Precision / P：Normal Precision

**Order Code Example 1: XXY160-50-170-G**

**Order Code Example 2: XXY650-105-750-P**

**Custom service is available as per user's requirement.**

## Installation and Precaution

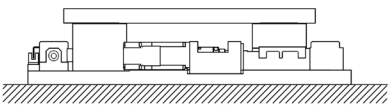

Horizontally installable

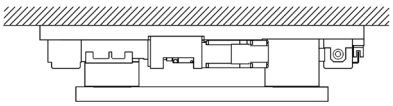

Invertable installation

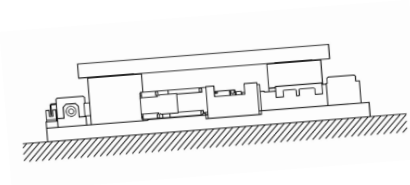

Non-tilt installation

## Load Installation Precaution

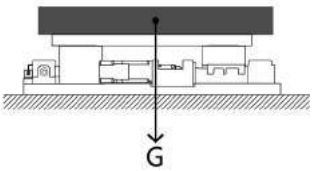


Load installation needs to ensure uniform force on the platform

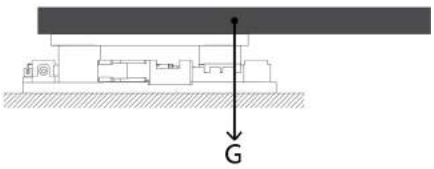


* The load is centered on the platform side

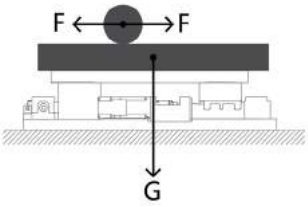


* Increase load during operation

* The load is stressed on the side of the platform and the load is increased during operation. Please consult your local dealer.

# XXY160-50-170-□

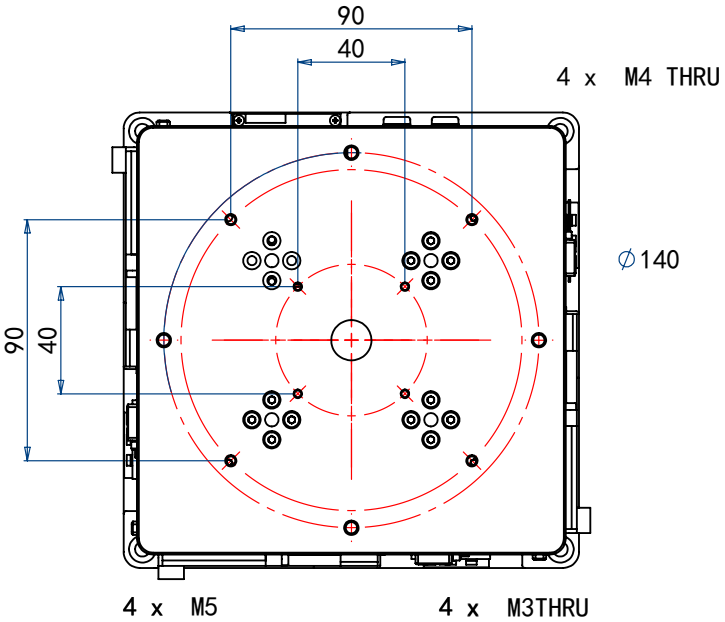


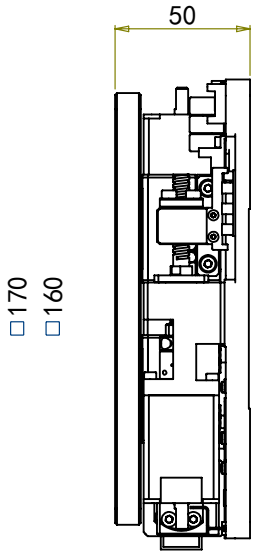


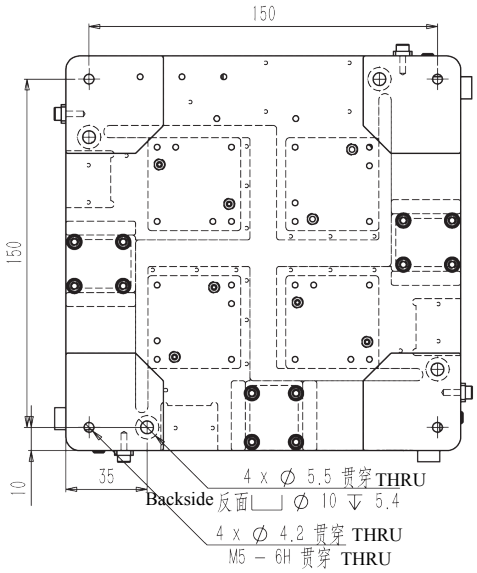

| | |
|---|---|
| Linear Stroke | ±5mm |
| Maximum Angle of Center Rotation | ±5° |
| Driver | Stepping Motor 28L |
| Drive screw | 0601 |
| Flatness | ±0.02mm |
| Motion Parallelism | ±0.03mm |

| | |
|---|---|
| Recommended Load | Horizontal Installation≤ 20KG |
| Surface Treatment | Anodizing Sandblasting Treatment |
| Accuracy Level | G Level：2μm |
| | B Level：5μm |
| | P Level：10μm |

# XXY160-55-220-□

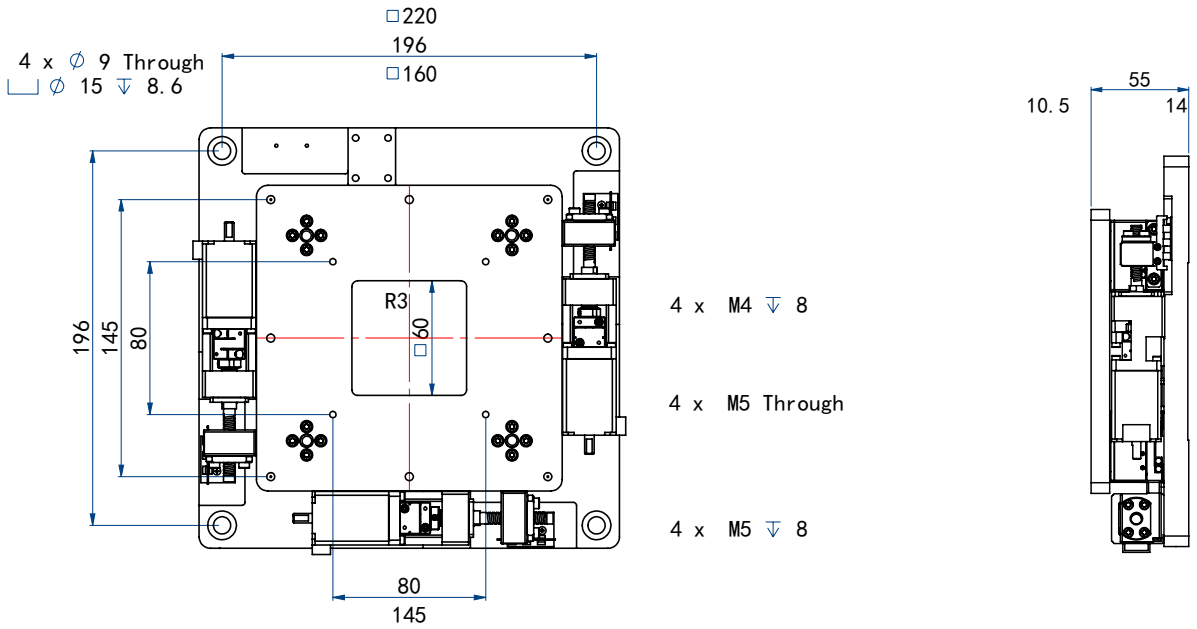


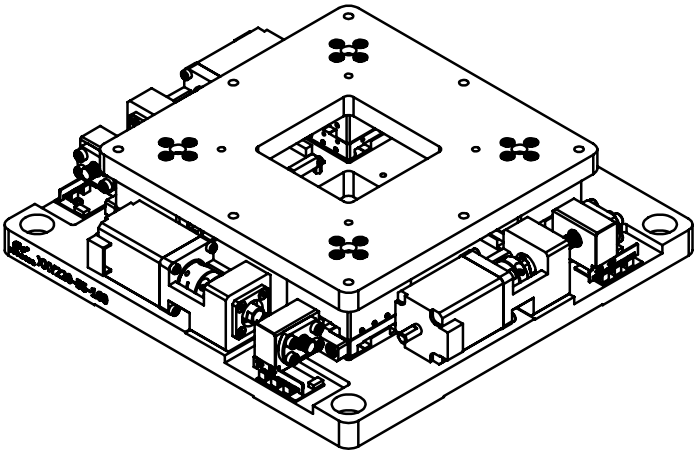

| | |
|---|---|
| Linear Stroke | ±5mm |
| Maximum Angle of Center Rotation | ±5° |
| Driver | Stepping Motor 28L |
| Drive screw | 0601 |
| Flatness | ±0.02mm |
| Motion Parallelism | ±0.03mm |

| | |
|---|---|
| Recommended Load | Horizontal Installation≤ 30KG |
| Surface Treatment | Anodizing Sandblasting Treatment |
| Accuracy Level | G Level：2μm |
| | B Level：5μm |
| | P Level：10μm |

# XXY160-65-180- □

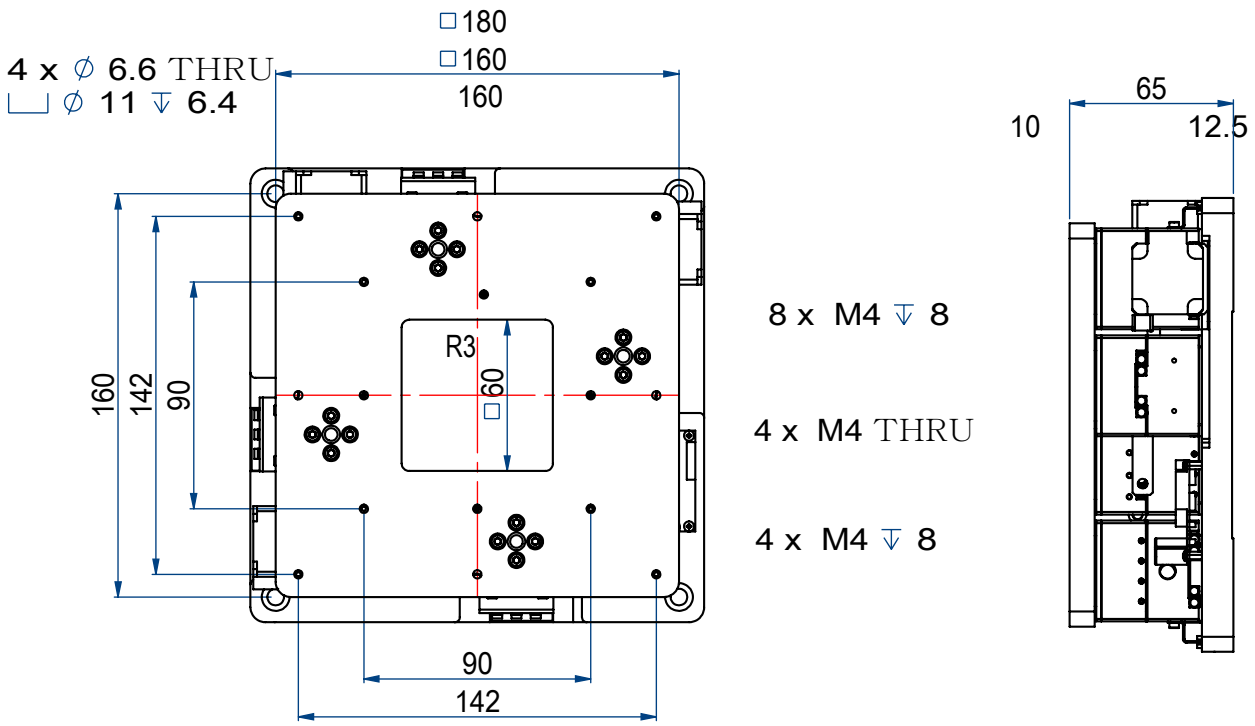


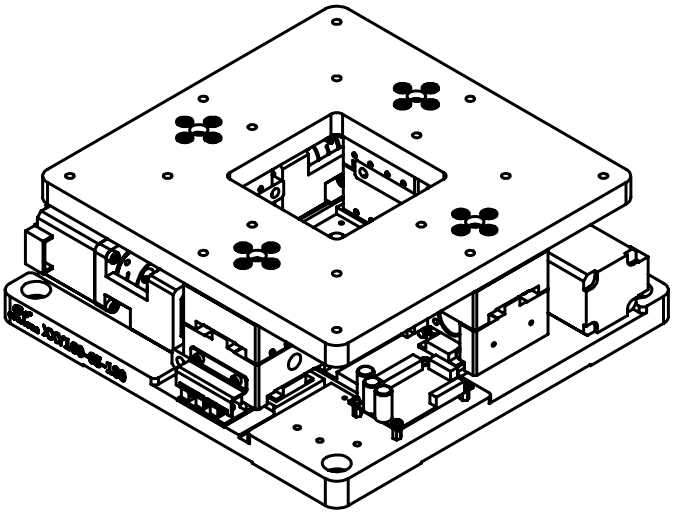

| | |
|---|---|
| Linear Stroke | ±5mm |
| Maximum Angle of Center Rotation | ±5° |
| Driver | Stepping Motor 28L |
| Drive screw | 0601 |
| Flatness | ±0.02mm |
| Motion Parallelism | ±0.03mm |

| | |
|---|---|
| Recommended Load | Horizontal Installation≤ 30KG |
| Surface Treatment | Anodizing Sandblasting Treatment |
| Accuracy Level | G Level：2μm |
| | B Level：5μm |
| | P Level：10μm |

# XXY250-62-310-□

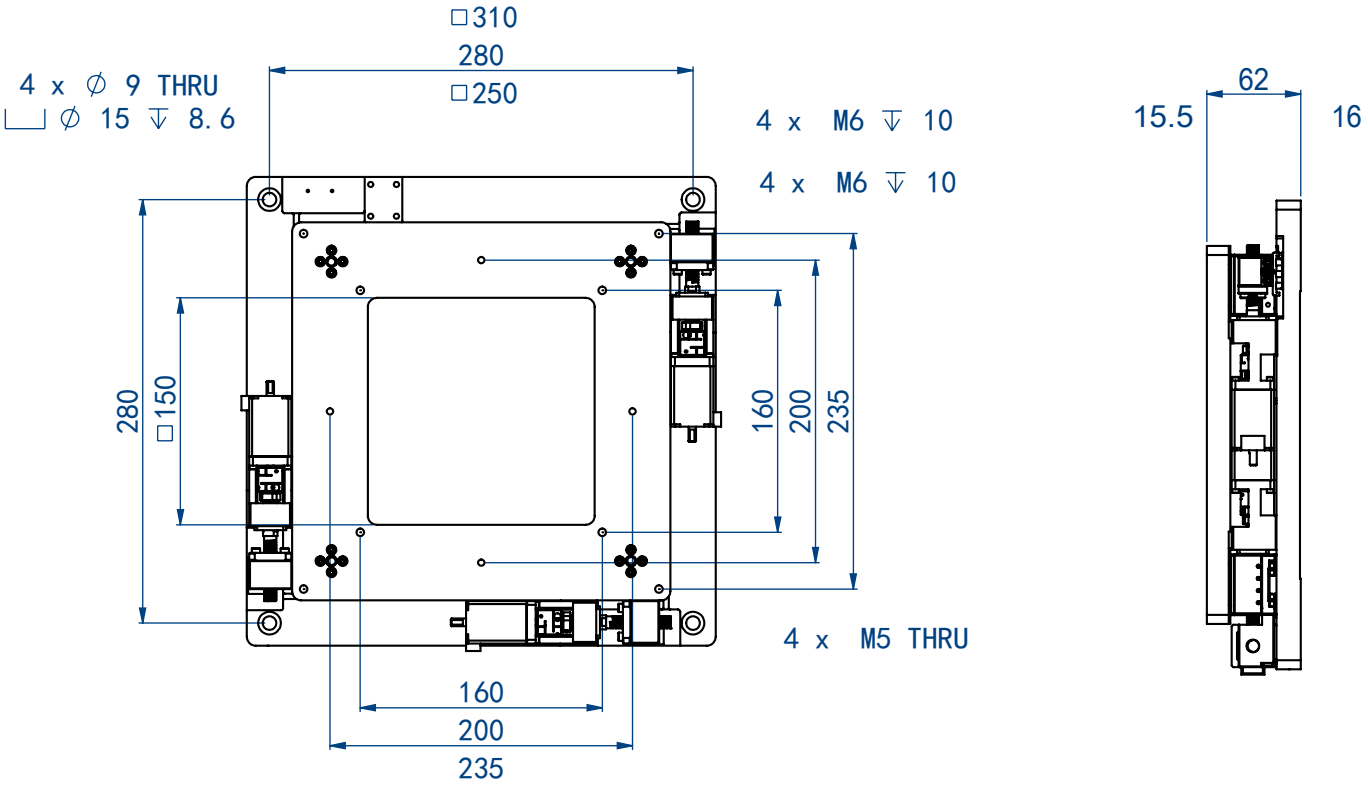


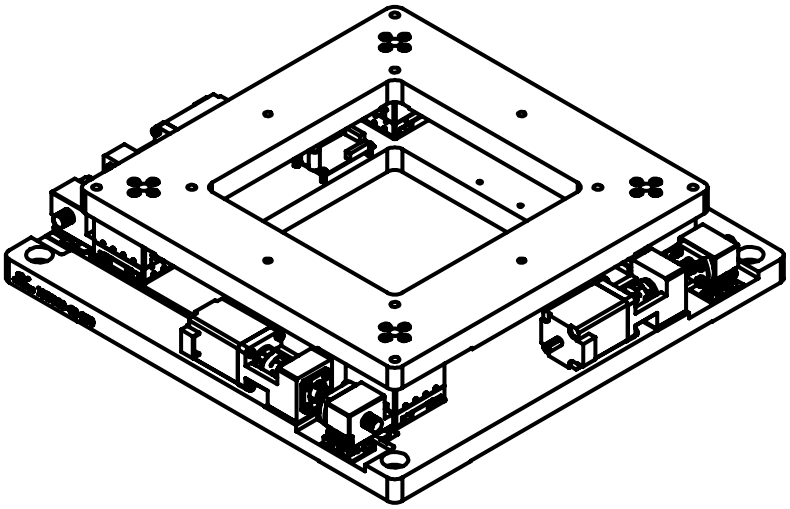

| | |
|---|---|
| Linear Stroke | ±5mm |
| Maximum Angle of Center Rotation | ±3° |
| Driver | Stepping Motor 28L |
| Drive screw | 0601 |
| Flatness | ±0.02mm |
| Motion Parallelism | ±0.03mm |

| | |
|---|---|
| Recommended Load | Horizontal Installation≤ 30KG |
| Surface Treatment | Anodizing Sandblasting Treatment |
| Accuracy Level | G Level：2μm |
| | B Level：5μm |
| | P Level：10μm |

# XXY250-75-350- □

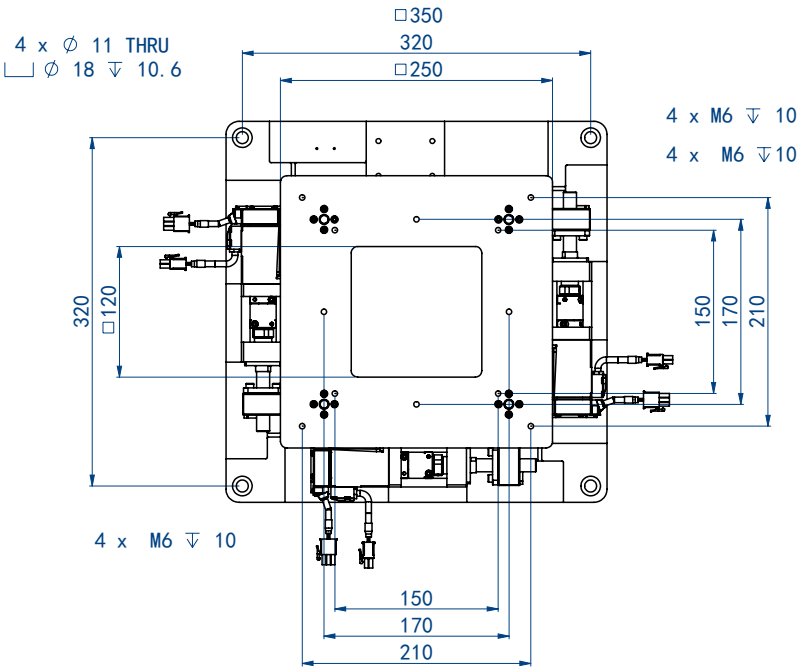


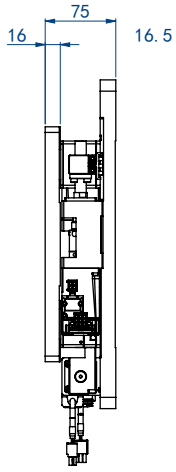


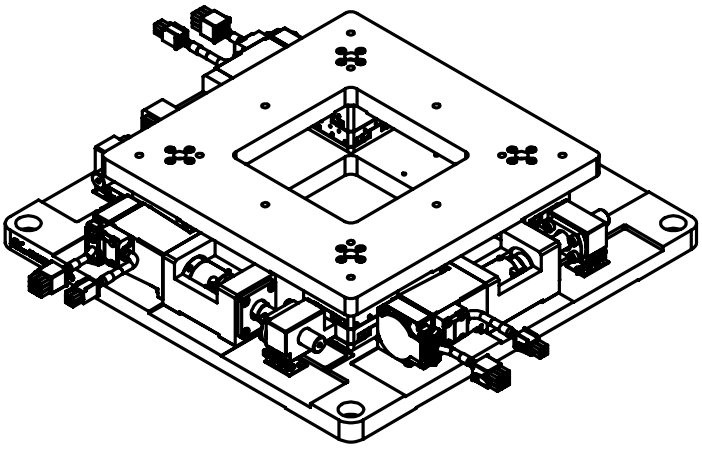

| | |
|---|---|
| Linear Stroke | ±5mm |
| Maximum Angle of Center Rotation | ±3° |
| Driver | Stepper Motor 42L/50W SV/100W SV |
| Drive screw | 0601 |
| Flatness | ±0.02mm |
| Motion Parallelism | ±0.03mm |

| | |
|---|---|
| Recommended Load | Horizontal Installation≤ 50KG |
| Surface Treatment | Anodizing Sandblasting Treatment |
| Accuracy Level | G Level：2μm |
| | B Level：5μm |
| | P Level：10μm |

# XXY350-105-450-□

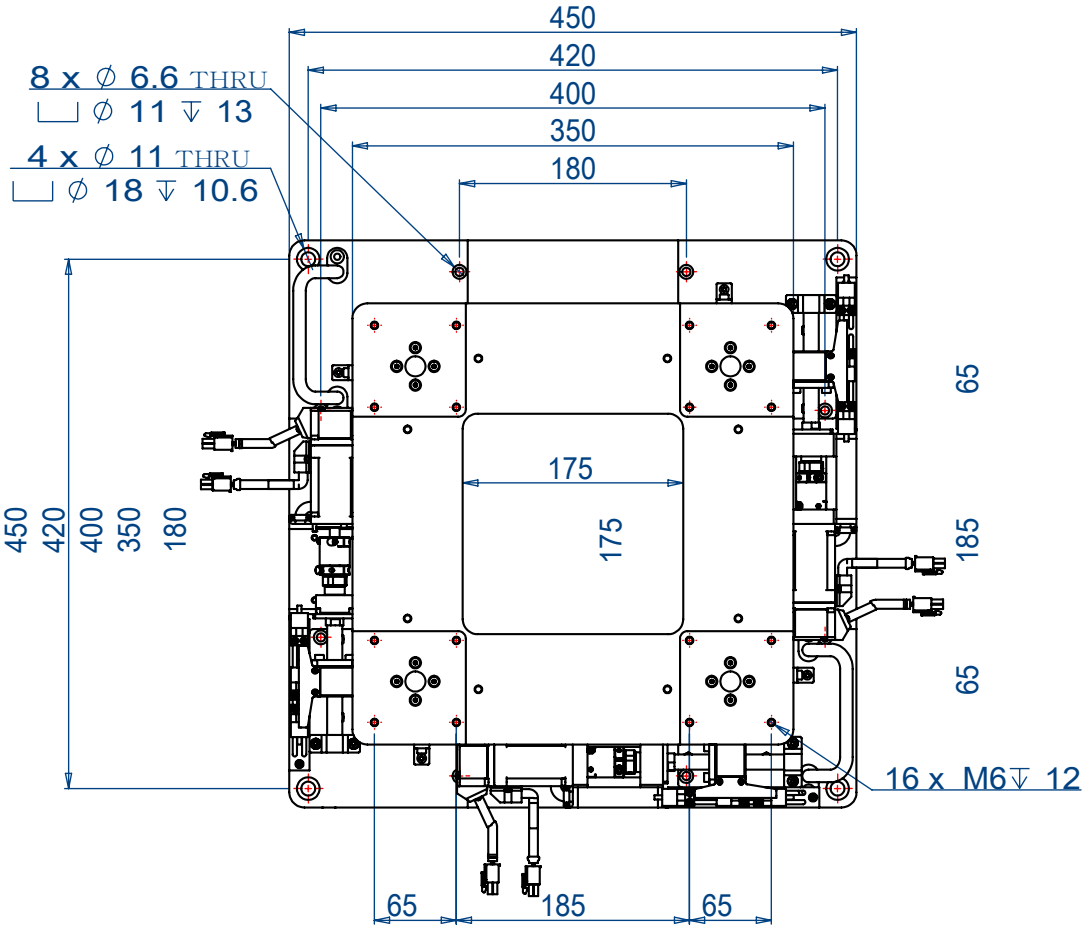


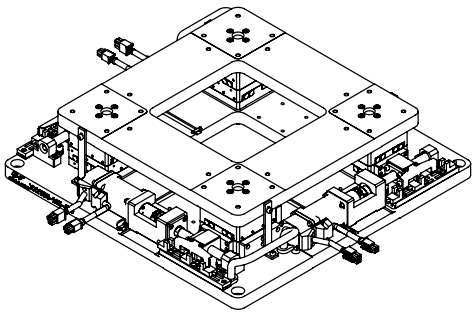

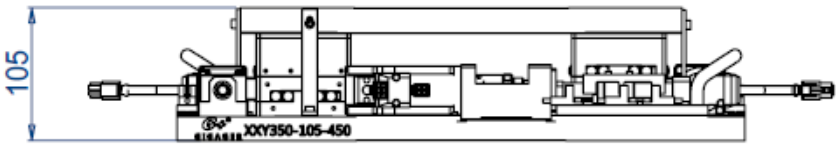

| | |
|---|---|
| Linear Stroke | ±5mm |
| Maximum Angle of Center Rotation | ±3° |
| Driver | Servo Motor 100W |
| Driver Screw | 1202 |
| Flatness | ±0.03mm |
| Motion Parallelism | ±0.03mm |
| Recommended Load | Horizontal Installation≤ 100KG |
| Surface Treatment | Anodizing Sandblasting Treatment |
| Accuracy Level | G Level：2μm |
| | B Level：5μm |
| | P Level：10μm |

# XXY450-105-550-□

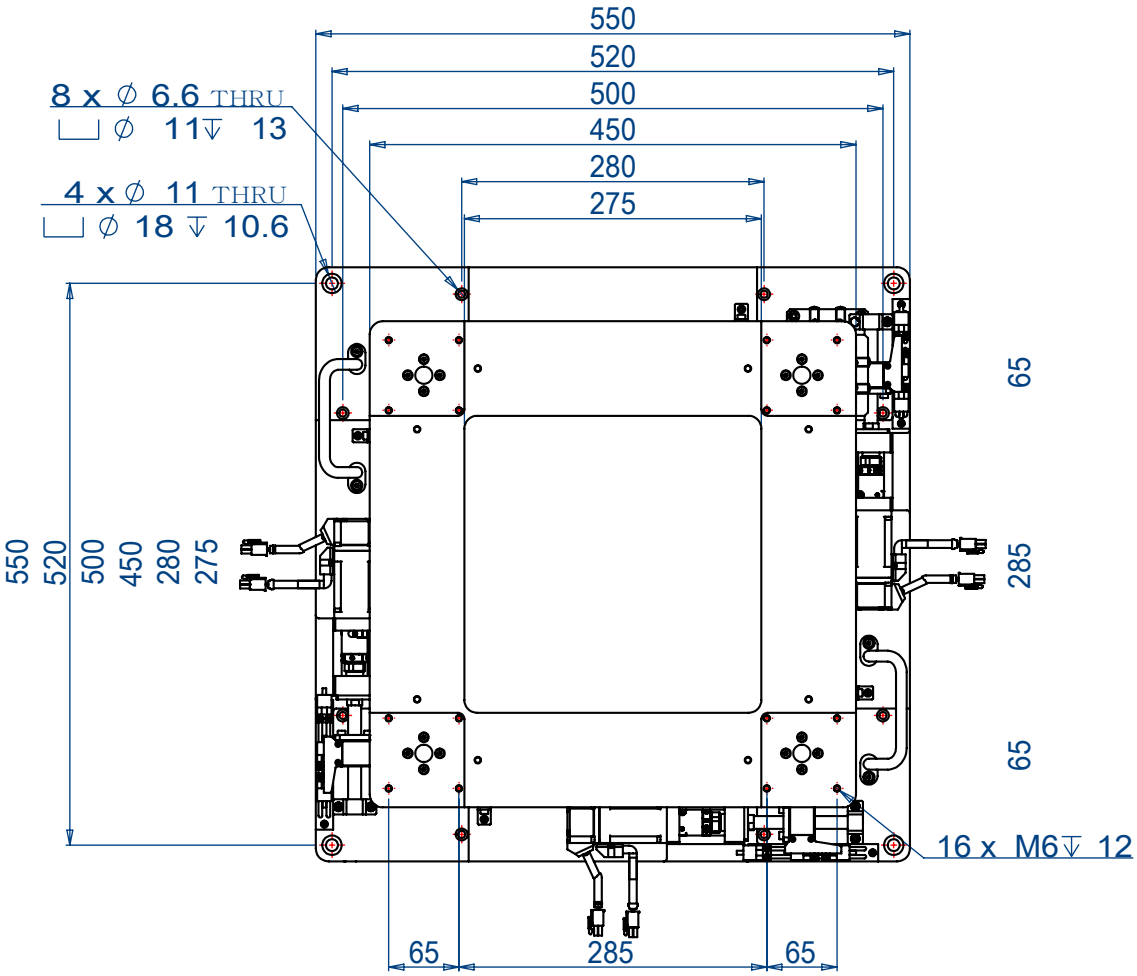


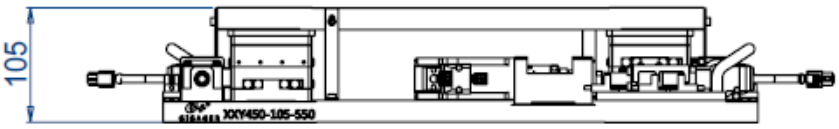


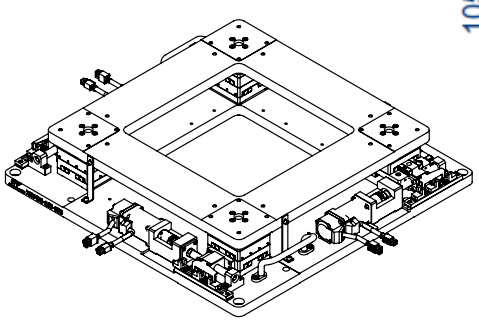

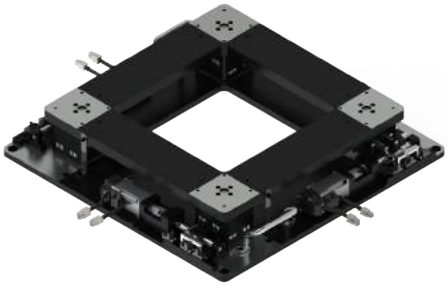

| | |
|---|---|
| Linear Stroke | ±5mm |
| Maximum Angle of Center Rotation | ±3° |
| Driver | Servo Motor 100W |
| Driver Screw | 1202 |
| Flatness | ±0.03mm |
| Motion Parallelism | ±0.03mm |
| Recommended Load | Horizontal Installation≤ 100KG |
| Surface Treatment | Anodizing Sandblasting Treatment |
| Accuracy Level | G Level：2μm |
| | B Level：5μm |
| | P Level：10μm |

# XXY550-105-650-□

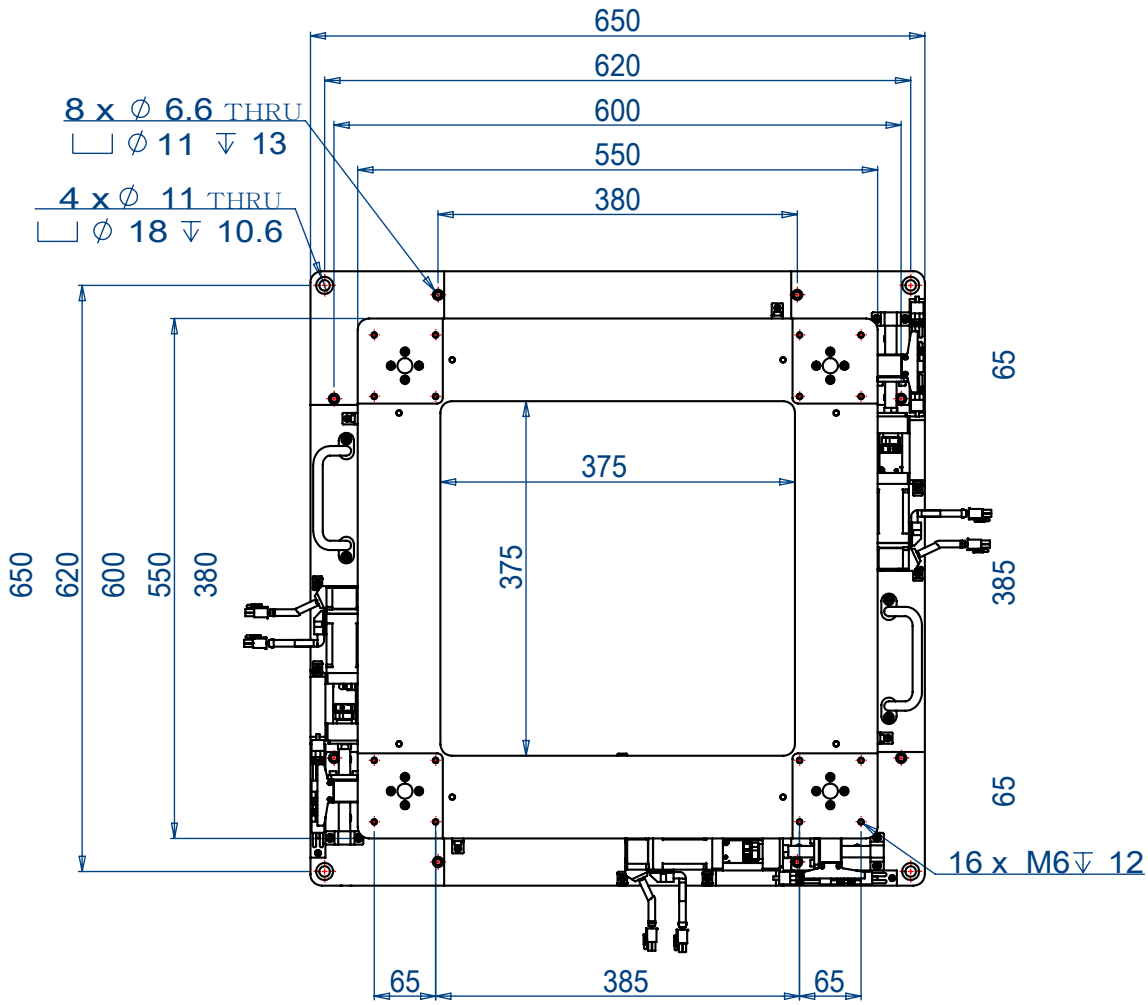


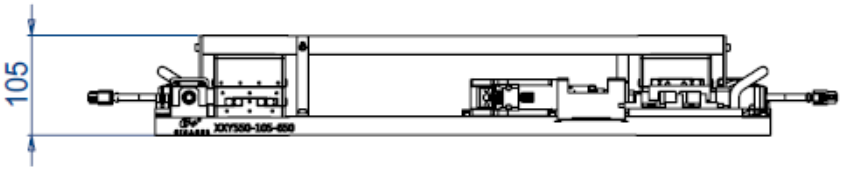


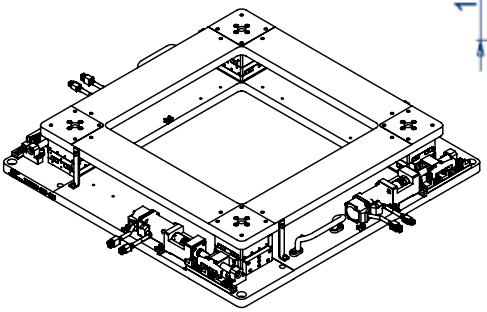

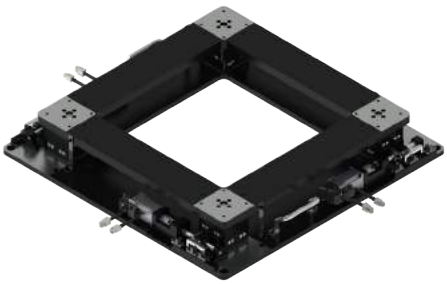

| | |
|---|---|
| Linear Stroke | ±5mm |
| Maximum Angle of Center Rotation | ±2.5° |
| Driver | Servo Motor 100W |
| Driver Screw | 1202 |
| Flatness | ±0.03mm |
| Motion Parallelism | ±0.03mm |
| Recommended Load | Horizontal Installation≤ 100KG |
| Surface Treatment | Anodizing Sandblasting Treatment |
| Accuracy Level | GLevel：2μm |
| | B Level：5μm |
| | P Level：10μm |

# XXY650-105-750-□

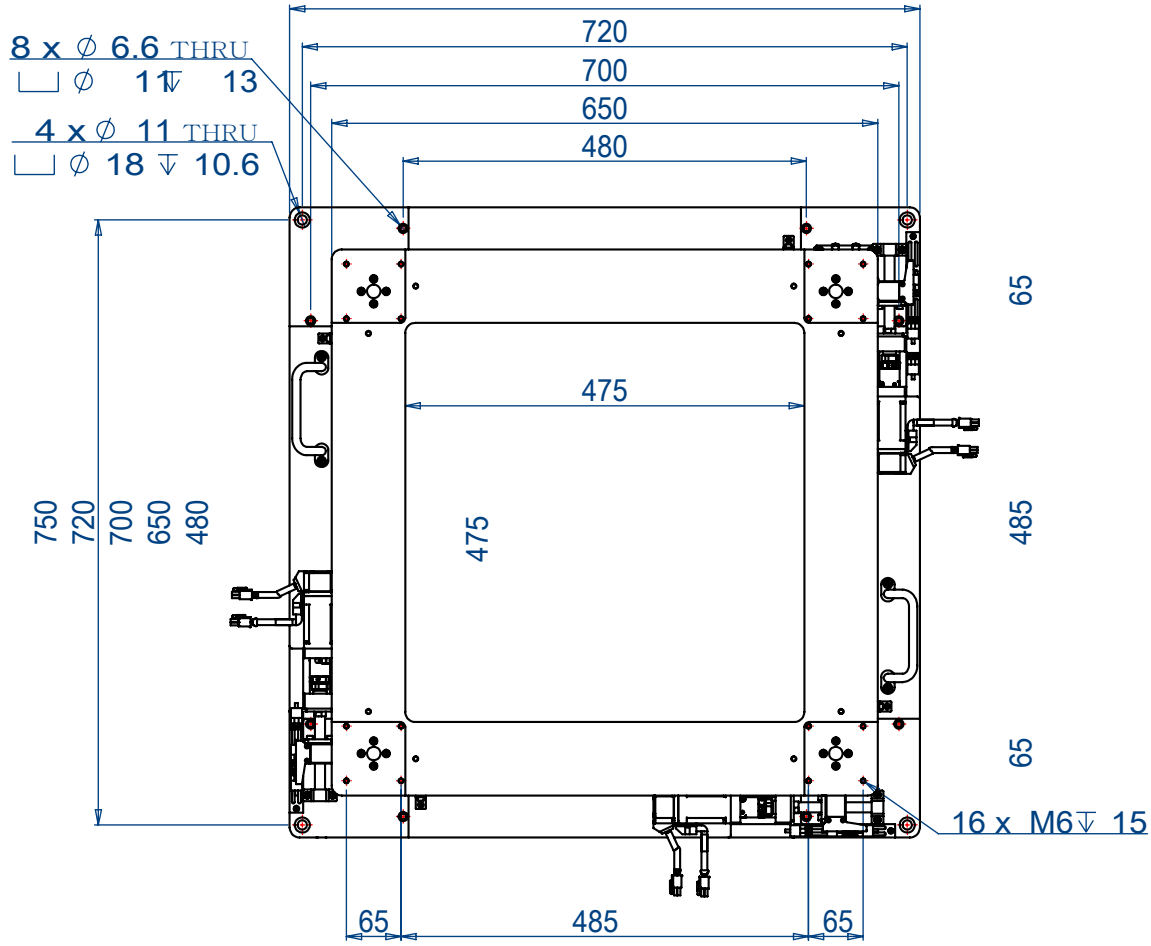


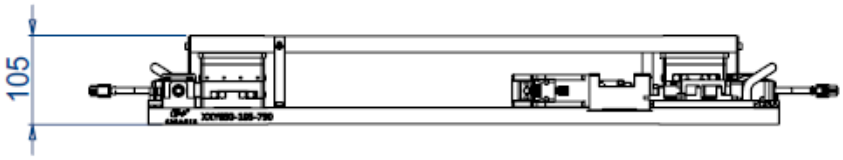


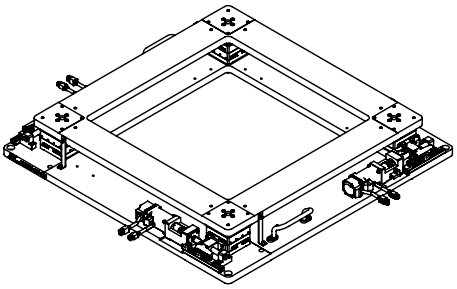

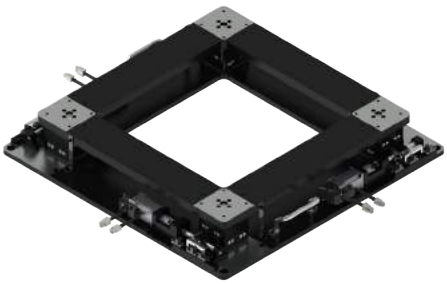

| | |
|---|---|
| Linear Stroke | ±5mm |
| Maximum Angle of Center Rotation | ±2° |
| Driver | Servo Motor 100W |
| Driver Screw | 1202 |
| Flatness | ±0.03mm |
| Motion Parallelism | ±0.03mm |
| Recommended Load | Horizontal Installation≤ 100KG |
| Surface Treatment | Anodizing Sandblasting Treatment |
| Accuracy Level | G Level：2μm |
| | B Level：5μm |
| | P Level：10μm |

## ■ XXY5M-01- □

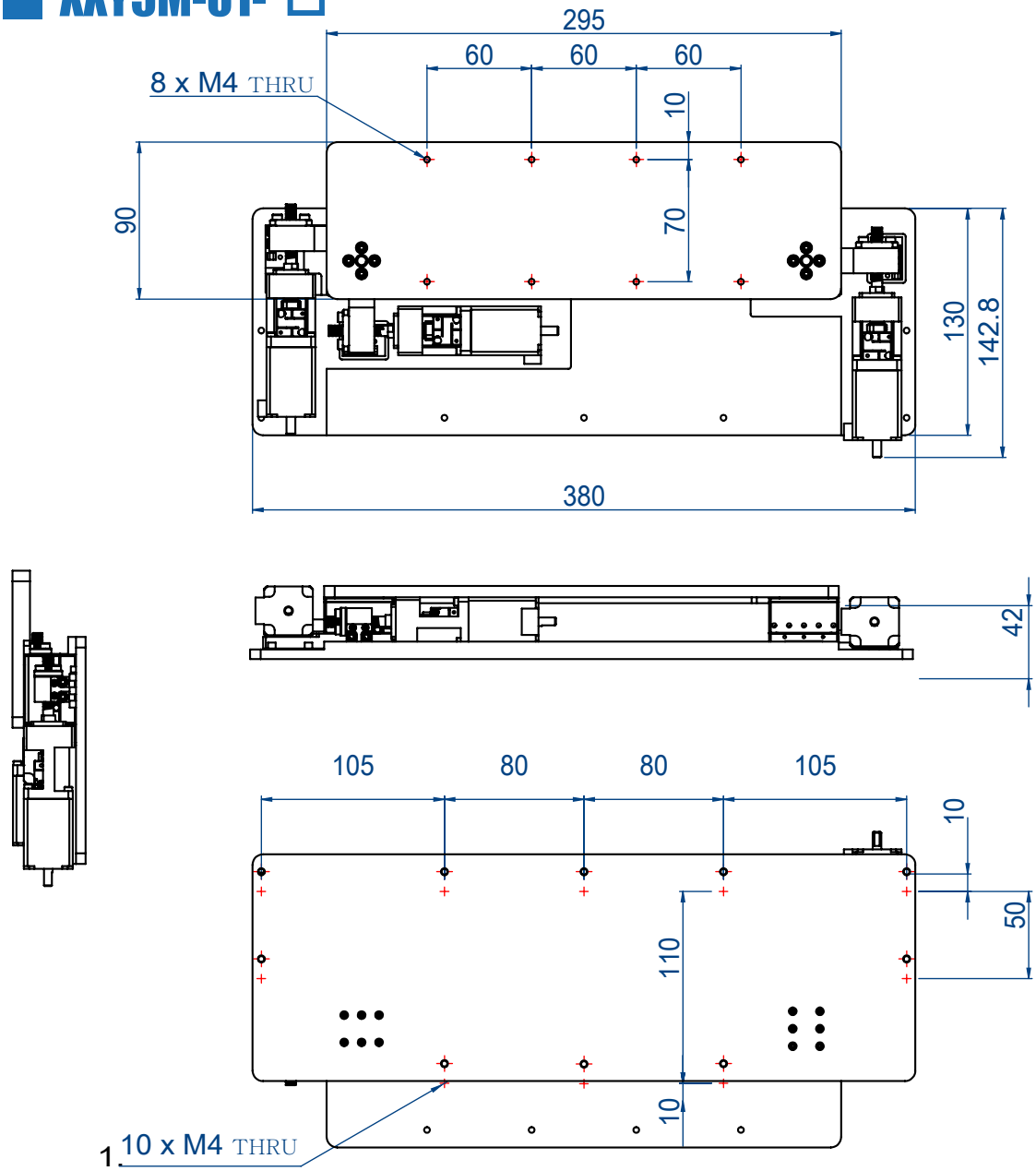


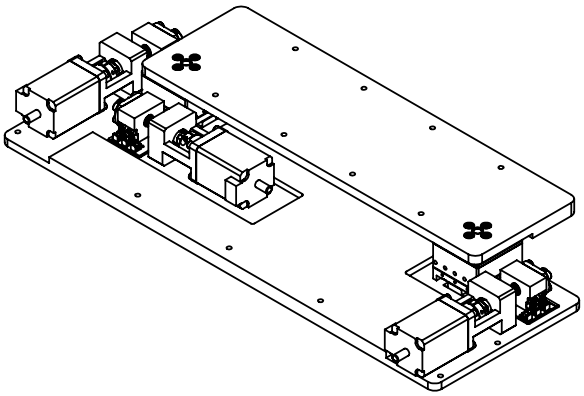

| | |
|---|---|
| Linear Stroke | ±5mm |
| Maximum Angle of Center Rotation | ±2.5° |
| Driver | Servo Motor 100W |
| Driver Screw | 1202 |
| Flatness | ±0.03mm |
| Motion Parallelism | ±0.03mm |
| Recommended Load | Horizontal Installation≤ 10KG |
| Surface Treatment | Anodizing Sandblasting Treatment |
| Accuracy Level | GLevel：2μm |
| | B Level：5μm |
| | P Level：10μm |

Guangdong Saini Intelligent Equipment Technology Co., Ltd.
Address: F3,Zhangshen Ave South No.25, Zhangmutou Town, Dongguan,Guangdong,China
Tele: +86 769 87782670 Email: info@gigager.com
Website: www.gigager.net
Trademark information: Brand G+, GIGAGER,吉嘉 owned by Saini Intelligent.